ИллюстрацияStarter assy and engine

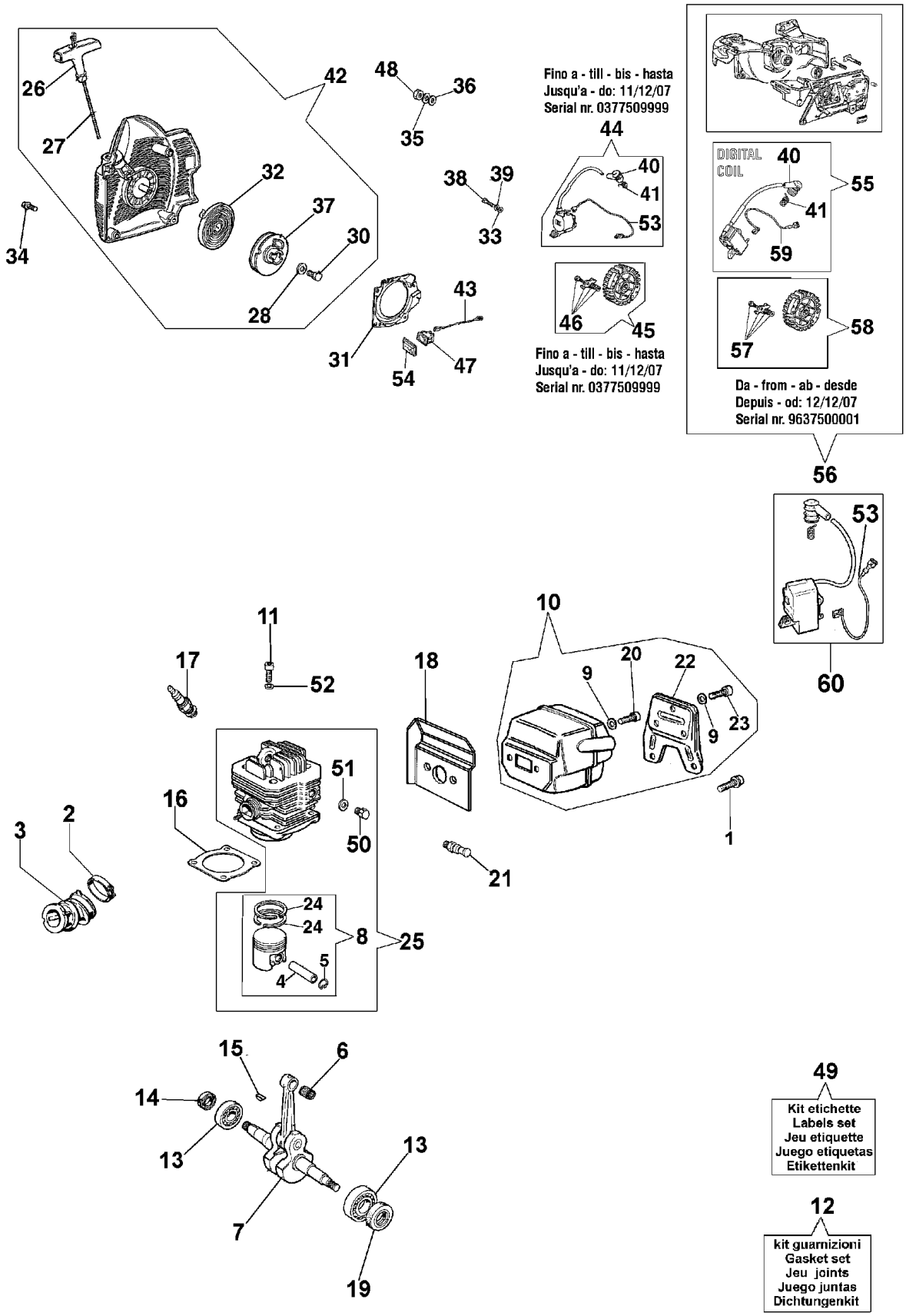

Иллюстрация Starter assy and engine

Ссылка №	Кол-во	Код артикула	Наименование
1	3	097000092AR	Screw
2	1	50200015AR	Band
3	1	50010026	Manifold
4	1	50010031R	Piston pin
5	2	007201198	Ring
6	1	3037014	Bearing
7	1	50010115R	Crankshaft
8	1	50012024	Piston assy
8	1	50010320	Piston assy
9	2	3033074	Washer
10	1	50022044	Muffler
11	4	005100906AR	Screw
12	1	50012052A	Gasket set
13	2	3034012R	Bearing
14	1	094500004R	Seal ring
15	1	094500028R	Key
16	1	50010046B	Gasket
17	1	3055114	Spark plug
18	1	50010058A	Gasket
19	1	007201313R	Seal ring
20	2	3801045	Screw
21	1	50010215	Decompressor
22	1	50010145	Cover
23	3	3801052R	Screw
24	2	50010033R	Seal ring
25	1	50012095A	Cylinder
26	1	097000064A	Handle
27	1	097000037R	Starter rope
28	1	3918006	Washer
30	1	3908036	Screw
31	1	50010019A	Flange
32	1	004000132R	Spring
33	2	3916004	Washer
34	4	097000092AR	Screw
35	1	3833080	Washer
36	1	005000361	Washer
37	1	52010439CR	Pulley
38	2	094000227	Screw
39	2	006000315	Washer
40	1	094600097A	Spark plug cap
41	1	094600169	Spring
42	1	50010315BR	Starter assy
43	1	097000121A	Cable
44	1	50020007BR	Ignition coil
45	1	52020061R	Flywheel
46	1	52012027	Pawl kit

ИллюстрацияStarter assy and engine

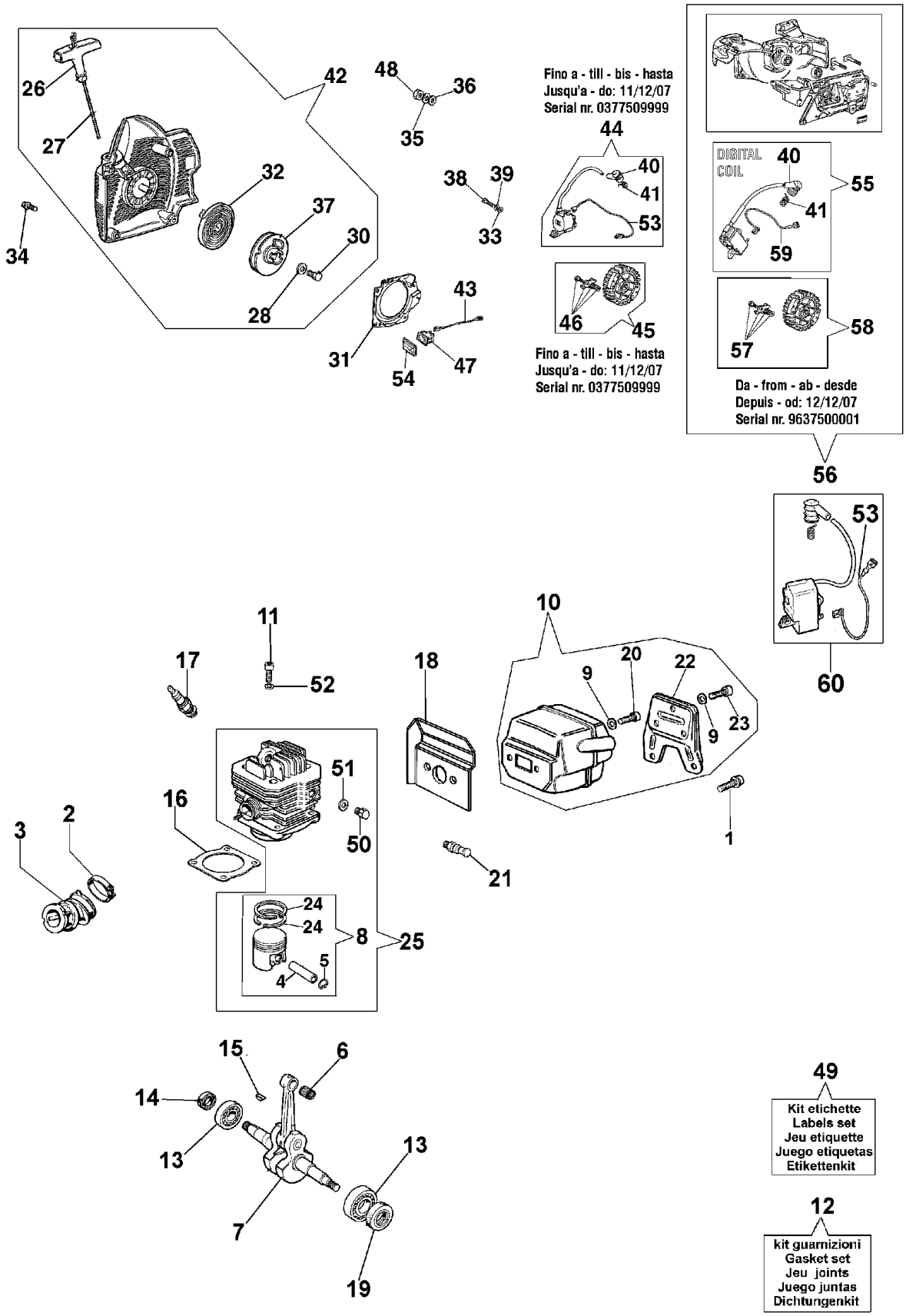

Иллюстрация Starter assy and engine

Ссылка №	Кол-во	Код артикула	Наименование
47	1	2317021R	Switch
48	1	004000142	Nut
49	1	50012061	Labels set
50	1	52010093	Screw
51	1	3078012	Washer
52	4	3833076	Washer
53	1	50020062R	Cable
54	1	2317013	Guard
55	1	50020053AR	Ignition coil
56	1	50090057	Conversion kit
57	1	52012027	Pawl kit
58	1	52020247R	Flywheel
59	1	50010333R	Cable
60	1	50020061R	Ignition coil

ИллюстрацияCrankcase and brake

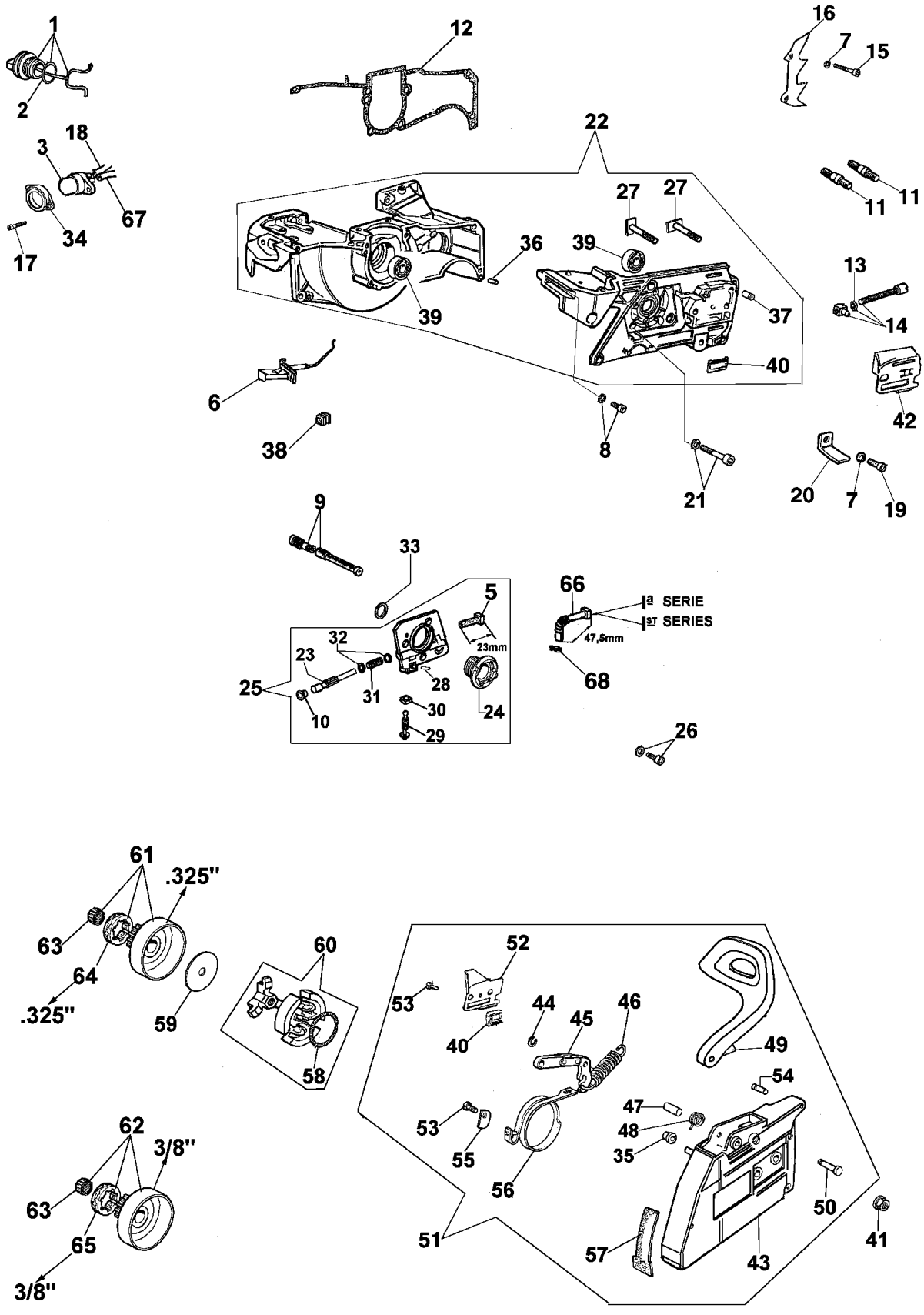

ИллюстрацияCrankcase and brake

Ссылка №	Кол-во	Код артикула	Наименование
1	1	50012009R	Cap
2	1	099900090	O-ring
3	1	50010032R	Air purge
5	1	50010163	Hose
6	1	50010065	Starter lever
7	8	3833073	Washer
8	1	005100987	Screw
9	1	097000147A	Oil suction
10	1	097000078	Cap
11	2	094500141AR	Stud
12	1	50010047AR	Gasket
13	1	50010079	Clamp
14	1	50010151	Chain tensioner
15	4	006100303	Screw
16	1	50010050B	Spike
17	2	3960106	Screw
18	1	50010090A	Hose
19	1	006000251R	Screw
20	1	097000283	Chain catcher
21	4	3801035	Screw
22	1	50010347	Crankcase assy
23	1	097000069B	Piston pump
24	1	50010036AR	Worm gear
25	1	50012138	Oil pump
26	3	006000024	Screw
27	2	50010301	Screw
28	1	097000062	Pin
29	1	50010037	Screw
30	1	097000068	Clamp
31	1	097000071A	Spring
32	2	097000070	Washer
33	1	50010044	Washer
34	1	50010175	Guard
35	1	006000300	Bushing
36	1	3023008R	Pin
37	1	097000229R	Breather valve
38	1	097000057	Grommet
39	2	3034012R	Bearing
40	1	50070149	Guard
41	2	50010148R	Nut
42	1	50010010A	Plate
43	1	50012018AR	Chain cover
44	1	3026003	Ring
45	1	097000146	Lever
46	1	099900152A	Spring
47	1	097000107	Pin

ИллюстрацияCrankcase and brake

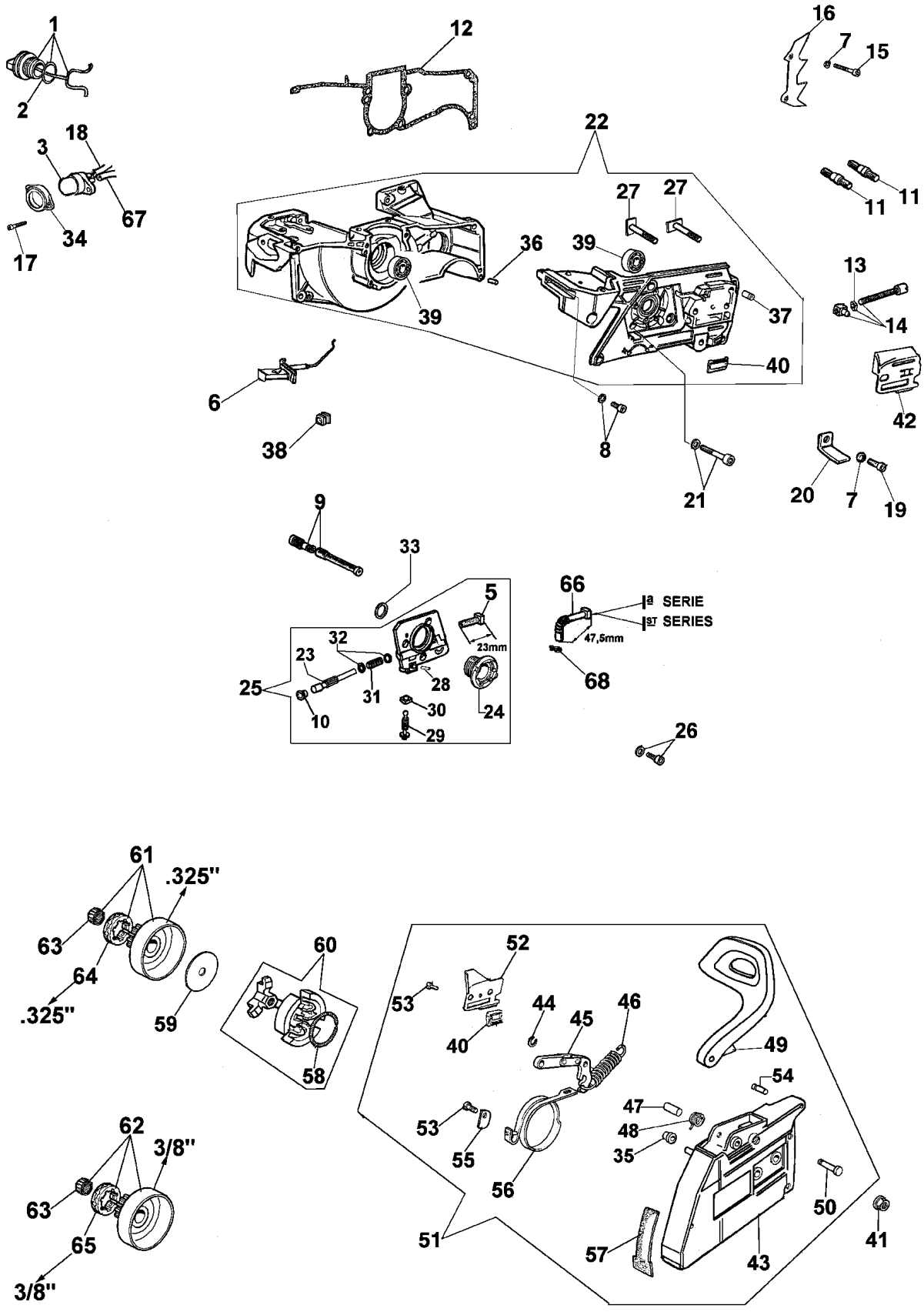

ИллюстрацияCrankcase and brake

Ссылка №	Кол-во	Код артикула	Наименование
48	1	50010088AR	Spring
49	1	50010126	Guard
50	1	097000106	Pin
51	1	50012044AR	Chain cover
52	1	50070124A	Plate
53	1	3960045	Screw
54	1	50010243	Pin
55	1	50010084	Plate
56	1	50010039	Brake band
57	1	50010353R	Deflector
58	1	004900137B	Spring
59	1	375100012A	Washer
60	1	50012023AR	Clutch
61	1	50012050	Clutch drum
62	1	50022034	Clutch drum
63	1	3037016	Bearing
64	1	094500046	Ring
65	1	006100730	Ring
66	1	50010060	Oil line
67	1	61060012A	Hose
68	1	3059003	Band

ИллюстрацияFuel tank and air filter

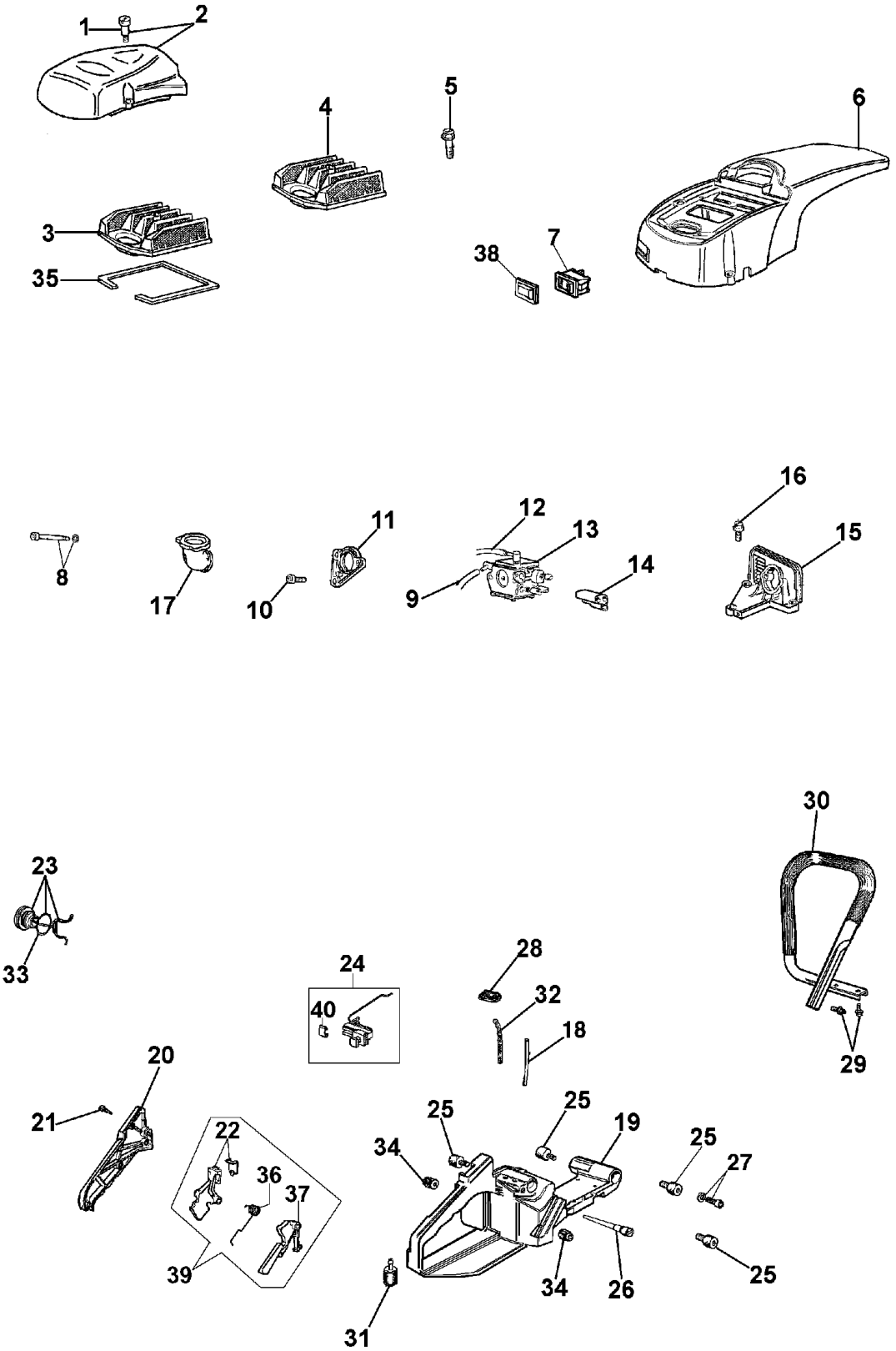

ИллюстрацияFuel tank and air filter

Ссылка №	Кол-во	Код артикула	Наименование
1	1	093000468A	Screw
2	1	50012048A	Cover
3	1	097000044R	Air filter flock
4	1	098000092R	Air filter nylon
5	1	099900296R	Screw
6	1	50012099R	Clutch cover
7	1	2317021R	Switch
8	2	61052009B	Screw
9	1	098000319	Hose
10	3	3960057R	Screw
11	1	50010028	Flange
12	1	094000215A	Hose
13	1	50010302A	Carburetor kit HDA-160C
14	1	50010125	Screw guide
15	1	50010017	Support
16	3	097000092AR	Screw
17	1	50010027R	Manifold
18	1	61060012A	Hose
19	1	50010227CR	Fuel tank
20	1	50010083	Cover
21	1	3960040R	Screw
22	1	50010157	Throttle lever
23	1	50012008R	Cap
24	1	52022048A	Throttle rod
25	4	097000038AR	Shock absorber
26	1	099900083A	Breather valve
27	4	006000251R	Screw
28	1	50010029	Grommet
29	1	097000061A	Screw
30	1	50020016R	Handle
31	1	50010218R	Fuel filter
32	1	098000319	Hose
33	1	099900090	O-ring
34	2	50010061R	Shock absorber
35	1	097000056	Gasket
36	1	097000028R	Spring
37	1	097000025AR	Lever
38	1	2317013	Guard
39	1	097000216B	Throttle s kit
40	1	52010134R	Plate

FINO A NOVEMBRE 2004
TILL NOVEMBER 2004
BIS NOVEMBER 2004
HASTA NOVIEMBRE 2004
JUSQU'A NOVEMBRE 2004

23 ■ KIT RIPARAZIONE
REPAIR KIT

22 ● KIT MEMBRANE & GUARNIZIONI
DIAPHRAGM & GASKET SET

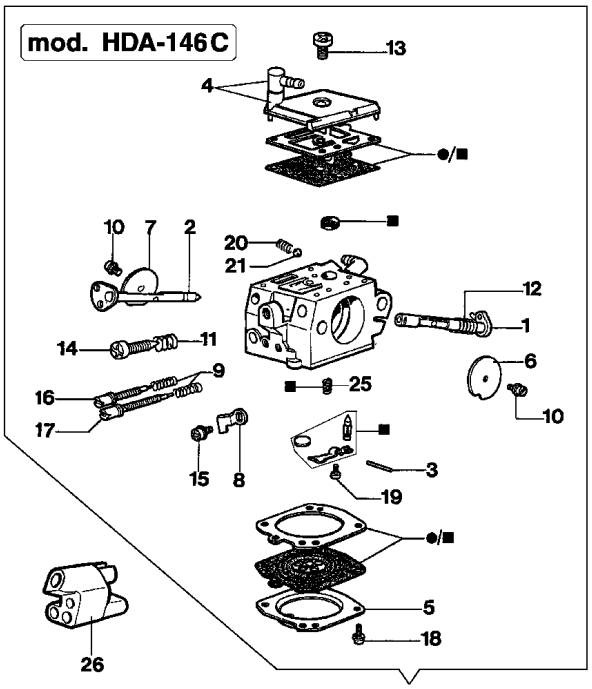

compl. 24

DA NOVEMBRE 2004
FROM NOVEMBER 2004
AB NOVEMBER 2004
DESDE NOVIEMBRE 2004
DEPUIS NOVEMBRE 2004

23 ■ KIT RIPARAZIONE
REPAIR KIT

22 ● KIT MEMBRANE & GUARNIZIONI
DIAPHRAGM & GASKET SET

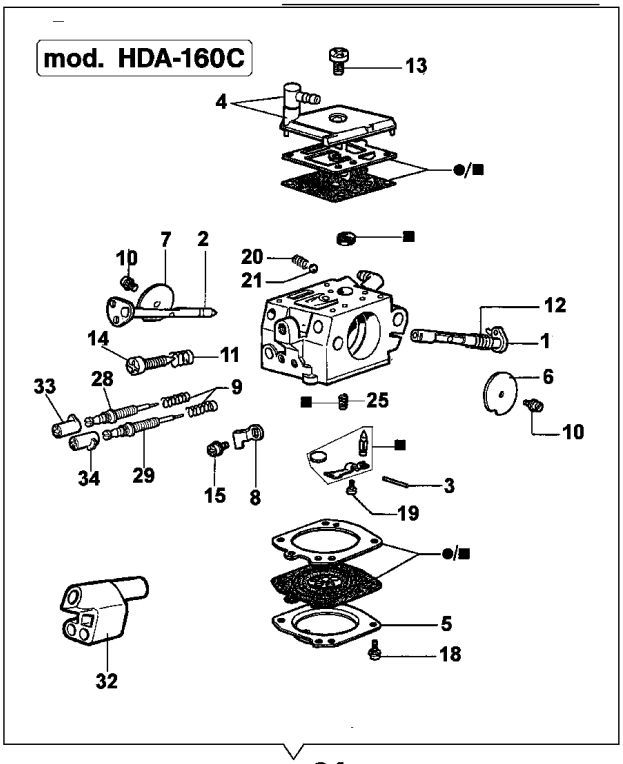

compl. 24

ИллюстрацияCarburetor HDA-160C

Ссылка №	Кол-во	Код артикула	Наименование
1	1	50010095	Shaft
2	1	50010096	Shaft
3	1	003300201	Spindle
4	1	50010097	Cover
5	1	50010098	Cover
6	1	50010099	Shutter
7	1	50010100	Shutter
8	1	50010101	Clamp
9	1	095000147	Spring
10	1	035000160	Screw
11	1	094600148	Spring
12	1	50010106	Spring
13	1	50010109	Screw
14	1	074000240	Adjust.screw
15	1	003300209	Screw
16	1	50010110	Screw H
17	1	095000158	Screw L
18	1	035000162	Screw
19	1	003300202	Screw
20	1	095000146	Spring
21	1	094600143	Ball
22	1	50010122A	Kit guarn
23	1	50010123A	Repair kit
24	1	50010302A	Carburetor kit HDA-160C
25	1	50070164	Spring
26	1	50010067	Screw guide
28	1	2318782	Screw H
29	1	2318781	Screw L
32	1	50010125	Screw guide
33	1	2318694	Cap
34	1	2318695	Cap