ИллюстрацияEngine

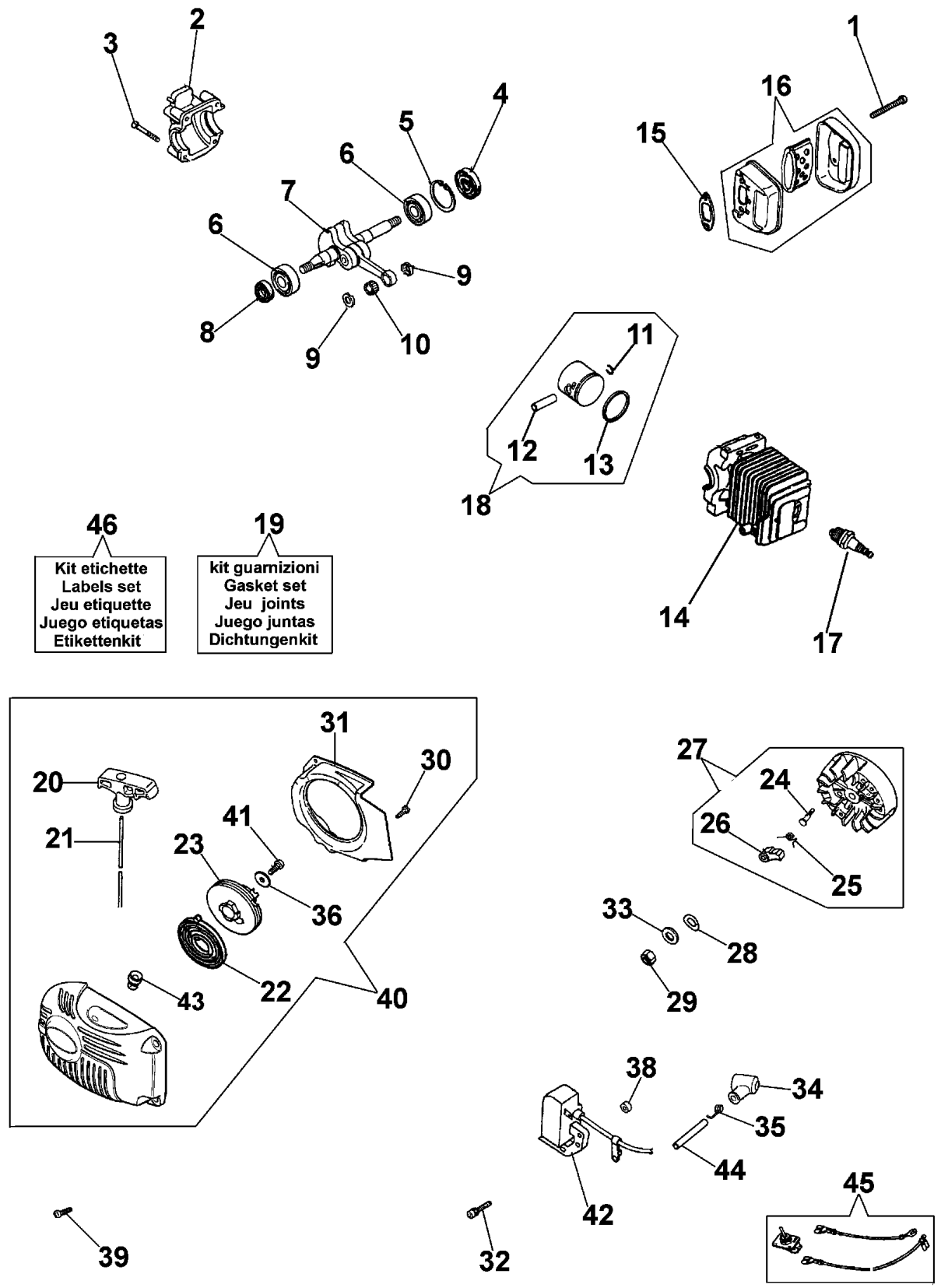

ИллюстрацияEngine

Ссылка №	Кол-во	Код артикула	Наименование
1	2	50030285	Screw
2	1	50040189R	Crankcase assy
3	4	50030004R	Screw
4	1	50030013R	Seal ring
5	1	50030014R	Ring
6	2	50030012R	Bearing
7	1	50030011R	Crankshaft
8	1	61070074	Seal ring
9	2	50030010R	Spacer
10	1	50030009R	Bearing
11	2	50030008R	Ring
12	1	50030007R	Piston pin
13	1	50030006R	Piston ring
14	1	50030002R	Cylinder
15	1	50030388R	Gasket
16	1	50030309	Muffler
17	1	50030297R	Spark plug
18	1	50032010	Piston assy Ø37
19	1	50032008	Gasket set
20	1	093500397	Handle
21	1	4098073R	Starter rope
22	1	004000132R	Spring
23	1	094000033AR	Starter pulley
25	2	50030112	Spring
26	2	004000140R	Pawl
27	1	50030143R	Flywheel
28	1	005000361	Washer
29	1	004000142	Nut
30	1	50030272	Screw
31	1	50030161	Flange
32	2	50030295	Screw
33	1	3833080	Washer
34	1	50030287	Spark plug cap
35	1	50030267	Spring
36	1	094500034R	Washer
38	1	50030145R	Spacer
39	4	50030269R	Screw
40	1	50032031R	Starter case
41	1	094600041AR	Screw
42	1	50030142R	Ignition coil
43	1	50030160R	Bushing
44	1	50030150R	Sheath
45	1	50030151R	Switch
46	1	50032042	Labels set

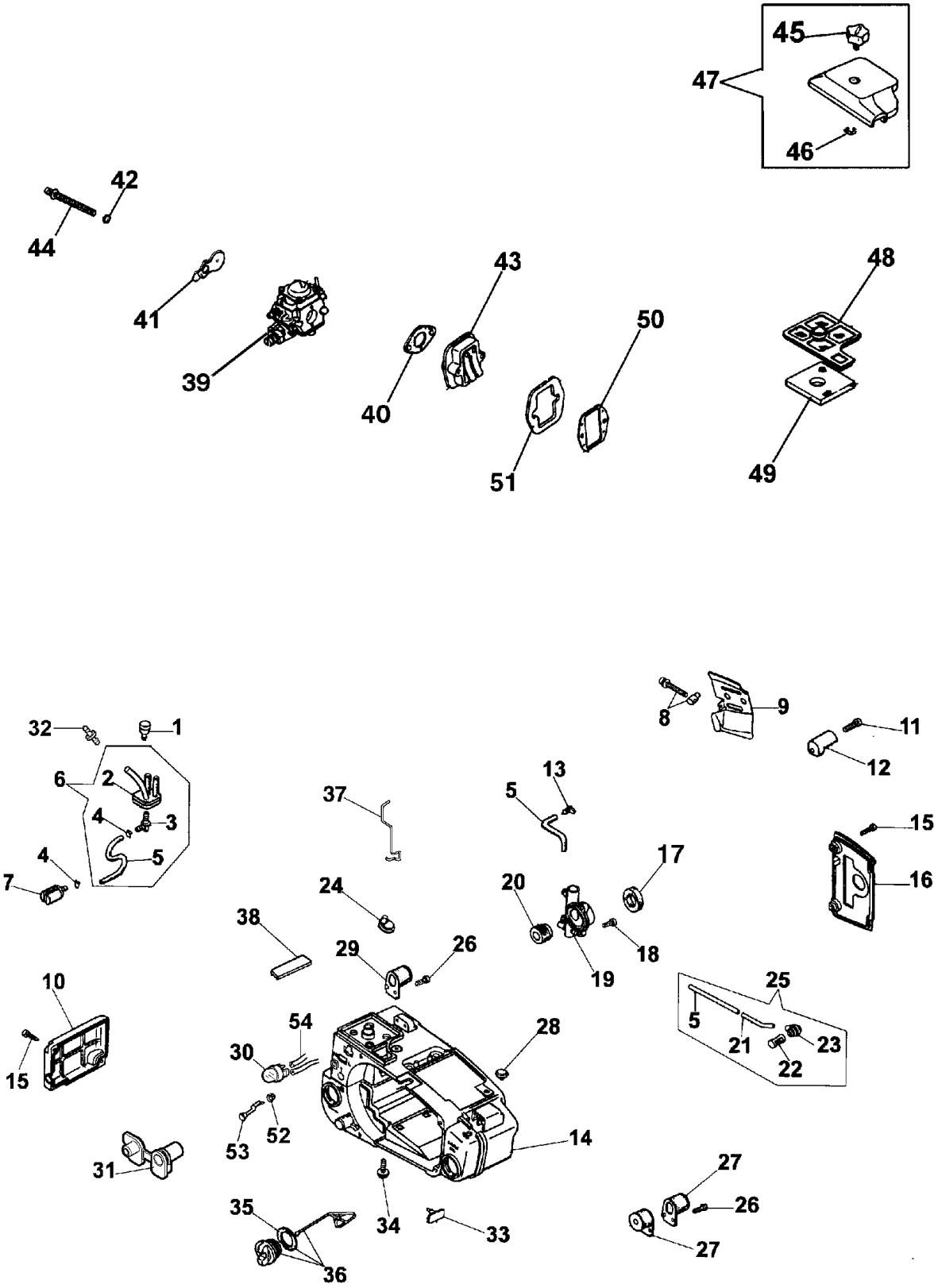
45
47
46
42
44
41
39
43
40
50
51
48
49
32
1
6
2
4
3
5
4
7
37
13
5
8
9
11
12
15
16
17
24
20
38
29
26
18
19
10
15
25
5
21
23
22
54
30
28
52
53
14
31
27
26
35
34
33
27
36

ИллюстрацияTank and air filter

Ссылка №	Кол-во	Код артикула	Наименование
1	1	50030040R	Breather valve
2	1	50030390	Bush
3	1	50030286	Fittings
4	2	50030037R	Band
5	1	50030265R	Fuel line
6	1	50030329	Fittings
7	1	50030036R	Fuel filter
8	1	50032011	Chain tensioner screw
9	1	50030125	Plate
10	1	50030201R	Cover
11	1	50030270	Screw
12	1	50030127R	Guard
13	1	50030052R	Clamp
14	1	50030196R	Crankcase assy
15	2	50030269R	Screw
16	1	50030207R	Cover
17	1	50030139R	Gasket
18	3	50030291	Screw
19	1	50032020R	Oil pump
20	1	50030136R	Worm gear
21	1	50030047R	Oil line
22	1	50030289	Filter
23	1	50030046R	Bush
24	1	50030173R	Grommet
25	1	50032057R	Oil suction
26	8	50030272	Screw
27	2	50030229R	Support
28	1	50030053R	Breather valve
29	2	50030085R	Support
30	1	50060012	Air purge
31	1	50030385	Screw guide
32	1	50160173	Fitting
33	1	50030033R	Breather valve
35	1	50030268	Gasket
36	2	50030304R	Cap
37	1	50030368	Rod
38	1	50030057R	Cover
39	1	2318633R	Carburetor WT-705
40	1	004000025	Gasket
41	1	50030337R	Starter lever
42	2	50030284	Spacer
43	1	50030022R	Valve
44	2	50030276R	Screw
45	1	50030308	Knob
46	1	50030184R	Ring
47	1	50030306	Cover

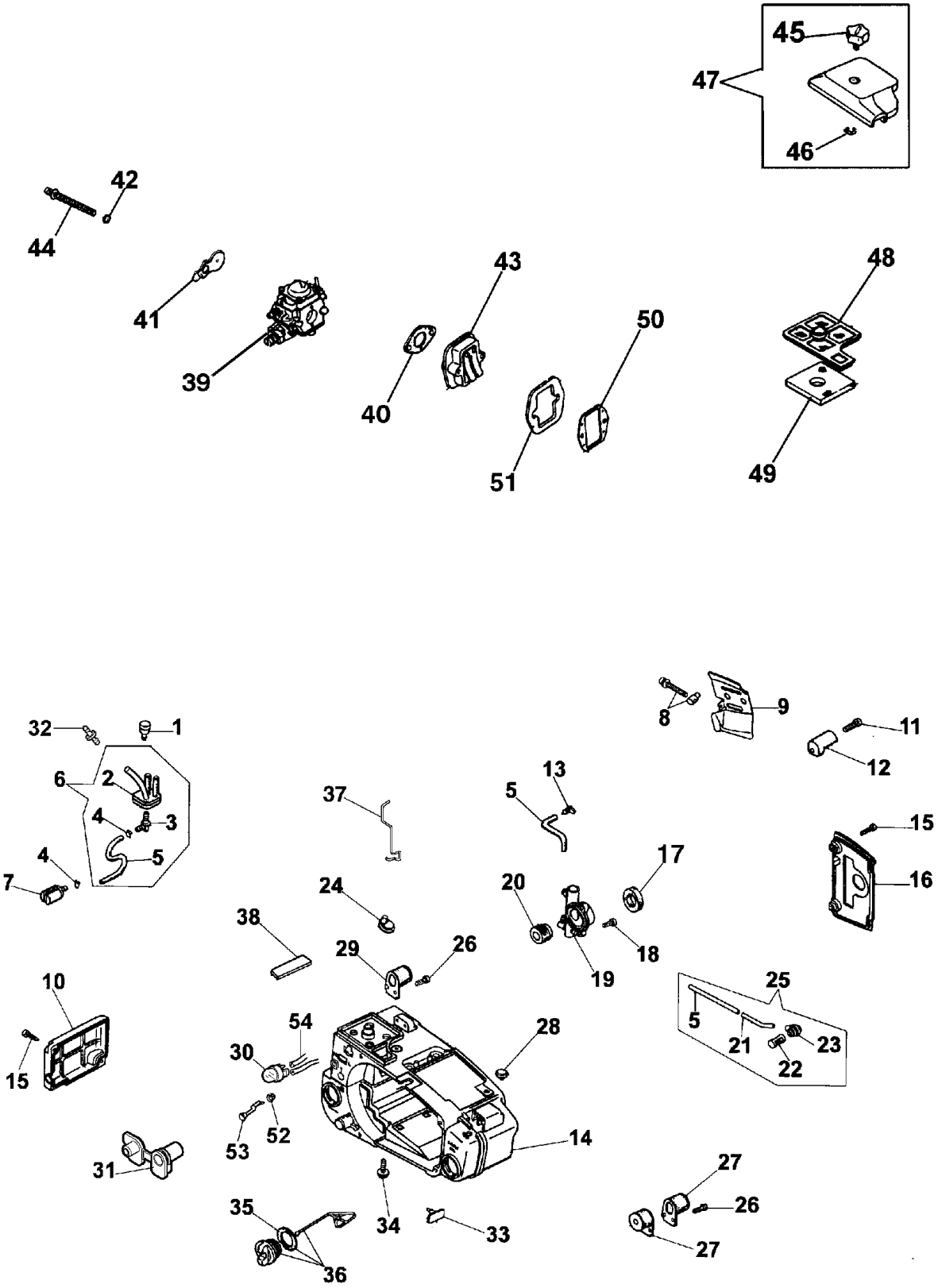
45
47
46
42
44
41
39
43
40
50
51
48
49
32
1
6
2
4
3
5
4
7
37
13
5
8
9
11
12
15
16
17
24
20
38
29
26
18
19
10
15
54
30
28
25
5
21
23
22
52
53
14
31
27
26
35
34
33
36
27

ИллюстрацияTank and air filter

Ссылка №	Кол-во	Код артикула	Наименование
48	1	50030277	Air filter
49	1	50030281R	Filter
50	1	50030023	Gasket
51	1	50030056R	Gasket
52	1	50030177R	Grommet
53	1	50030176R	Starter lever
54	1	50030330R	Hose

Иллюстрация Clutch assy and handles

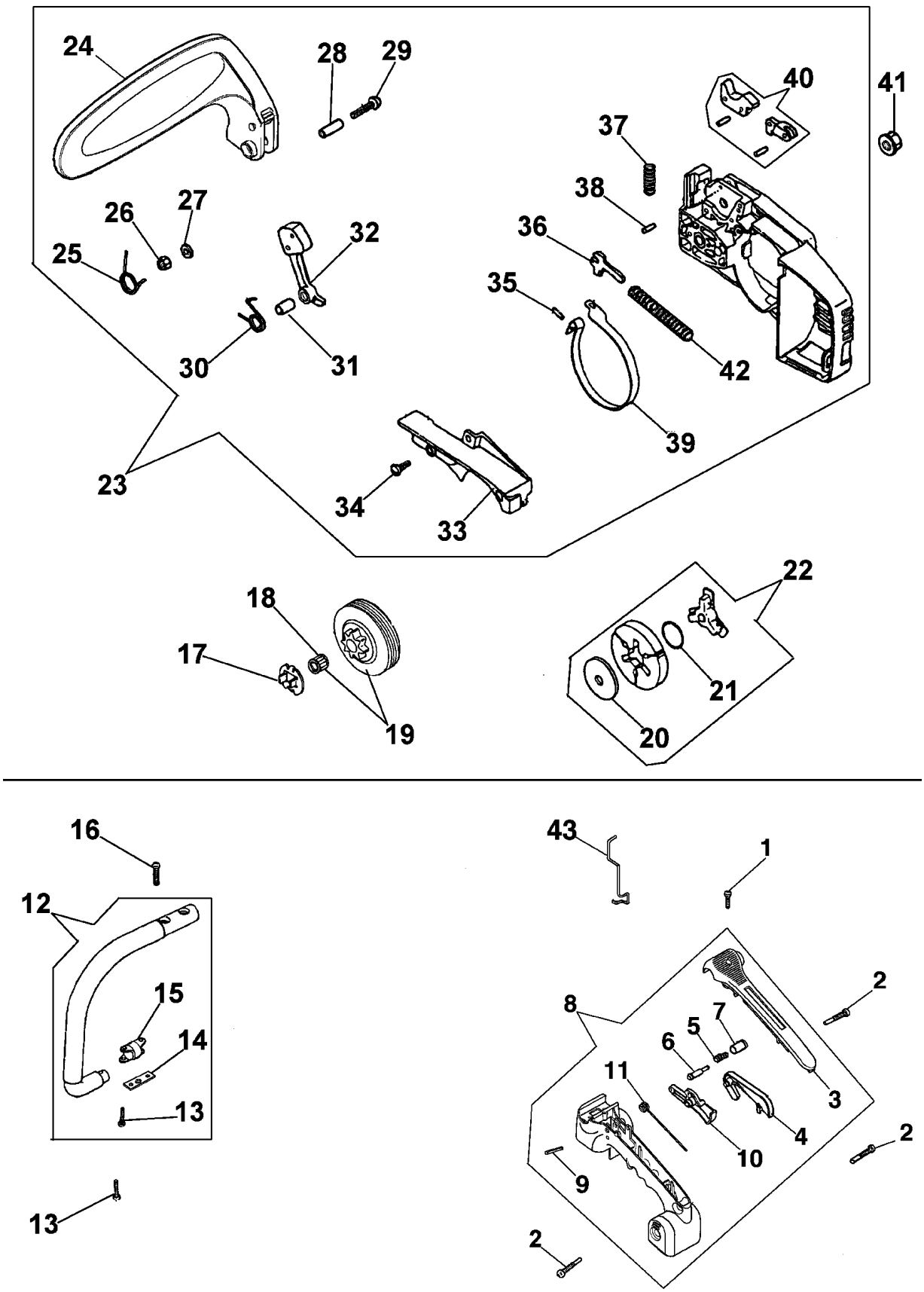

ИллюстрацияClutch assy and handles

Ссылка №	Кол-во	Код артикула	Наименование
1	1	50030269R	Screw
2	2	50030279	Screw
3	1	50030249	Cover
4	1	50030082AR	Throttle lever
5	1	50030077	Spring
6	1	50030076R	Pin
7	1	50030078R	Button
8	1	50032037	Handle kit
9	1	50030081	Pin
10	1	50030237	Throttle lever
11	1	50030080	Spring
12	1	50030065R	Handle
13	1	50030270	Screw
14	1	50030068	Strap
15	1	50030067R	Support
16	1	50030271	Screw
17	1	50030138R	Clutch driver
18	1	50030372	Bearing
19	1	50032009	Sprocket
20	1	50030092	Washer
21	1	50030350R	Spring
22	1	50030090A	Clutch
23	1	50032029R	Chain cover
24	1	50030242	Guard
25	1	50030100	Spring
26	1	3914003	Nut
27	1	3916005	Washer
28	1	50030105R	Spacer
29	1	50030292	Screw
30	1	50030110	Spring
31	1	50030106R	Bushing
32	1	50030107AR	Weight
33	1	50030205	Cover
34	1	50030272	Screw
35	1	50030116R	Pin
36	1	50030118R	Lever
37	1	50030111	Spring
38	1	50030117	Pin
39	1	50030119R	Brake band
40	1	50030113R	Brake lever
41	1	50010148R	Nut
42	1	50030121	Spring
43	1	50030368	Rod

FINO A NOVEMBRE 2004
TILL NOVEMBER 2004
BIS NOVEMBER 2004
HASTA NOVIEMBRE 2004
JUSQU'A NOVEMBRE 2004

16 ■ KIT RIPARAZIONE / REPAIR KIT

22 ● KIT MEMBRANE & GUARNIZIONI / DIAPHRAGM & GASKET SET

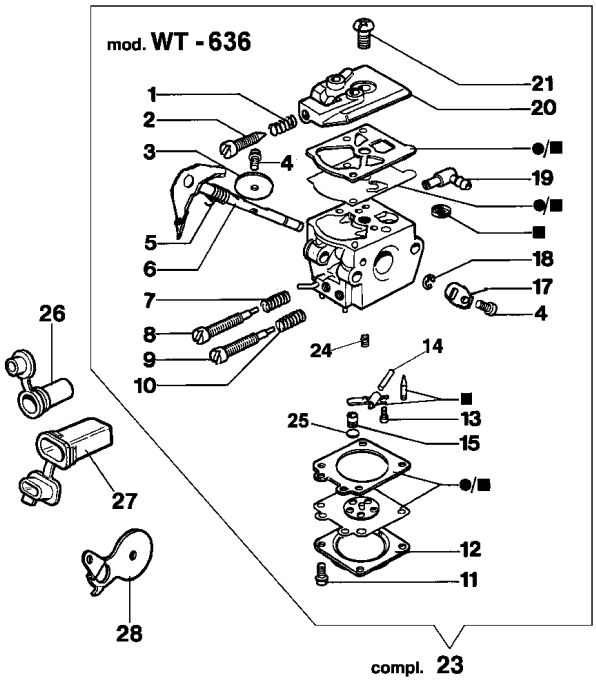

DA NOVEMBRE 2004
FROM NOVEMBER 2004
AB NOVEMBER 2004
DESDE NOVIEMBRE 2004
DEPUIS NOVEMBRE 2004

16 ■ KIT RIPARAZIONE / REPAIR KIT

22 ● KIT MEMBRANE & GUARNIZIONI / DIAPHRAGM & GASKET SET

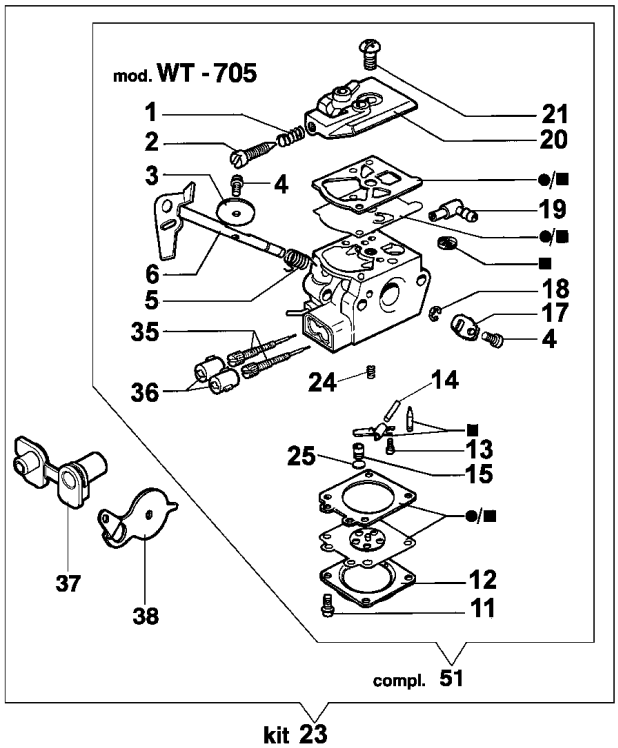

ИллюстрацияCarburetor WT-705

Ссылка №	Кол-во	Код артикула	Наименование
1	1	2318616	Spring
2	2	2318617	Screw
3	1	375100078	Shutter
4	1	003300209	Screw
5	1	2318615	Spring
6	1	2318620	Shaft
7	1	035000165	Spring
8	1	2318618	Screw L
9	1	2318619	Screw H
10	1	093500115	Spring
11	1	035000162	Screw
12	1	2318191	Cover
13	1	003300202	Screw
14	1	003300201	Spindle
15	1	093500218	Jet
16	1	094600209	Repair kit
17	1	2318614	Lever
18	1	095000164	Ring
19	1	003300036	Fittings
20	1	2318612	Cover
21	1	003300197	Screw
22	1	094600210	Kit guarn
24	1	093500541	Spring
25	1	094600142	Cap
26	1	50030174R	Screw guide
27	1	50030175R	Screw guide
28	1	50030167R	Starter lever
35	1	2318631	Screw
36	2	2318639	Clamp
37	1	50030385	Screw guide
38	1	50030337R	Starter lever
51	1	2318633R	Carburetor WT-705